MODEL EL-140H (SHOWN WITH 250 GALLON SINGLE WALL TANK)

- CABINET WEIGHT WITH BURNER AND BLOWER: ~ 295 LBS
- TANK WEIGHT EMPTY: ~ 425 LBS (600 LBS FOR 500 GALLON SW)
- FLUE DIAMETER: 8-INCH (CAN BE REDUCED TO 6-INCH)
- FREE AIR DELIVERY: ~1000 CFM
- HEATING AREA: UP TO 3500 SQ FT WITH 16' CEILINGS

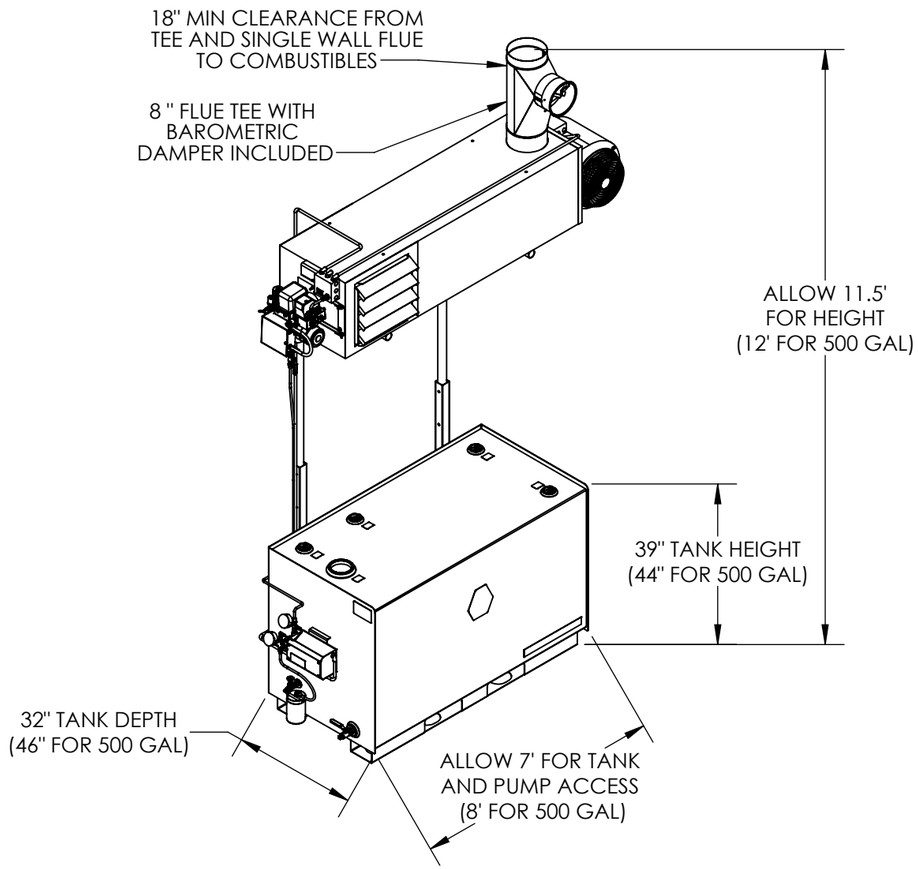

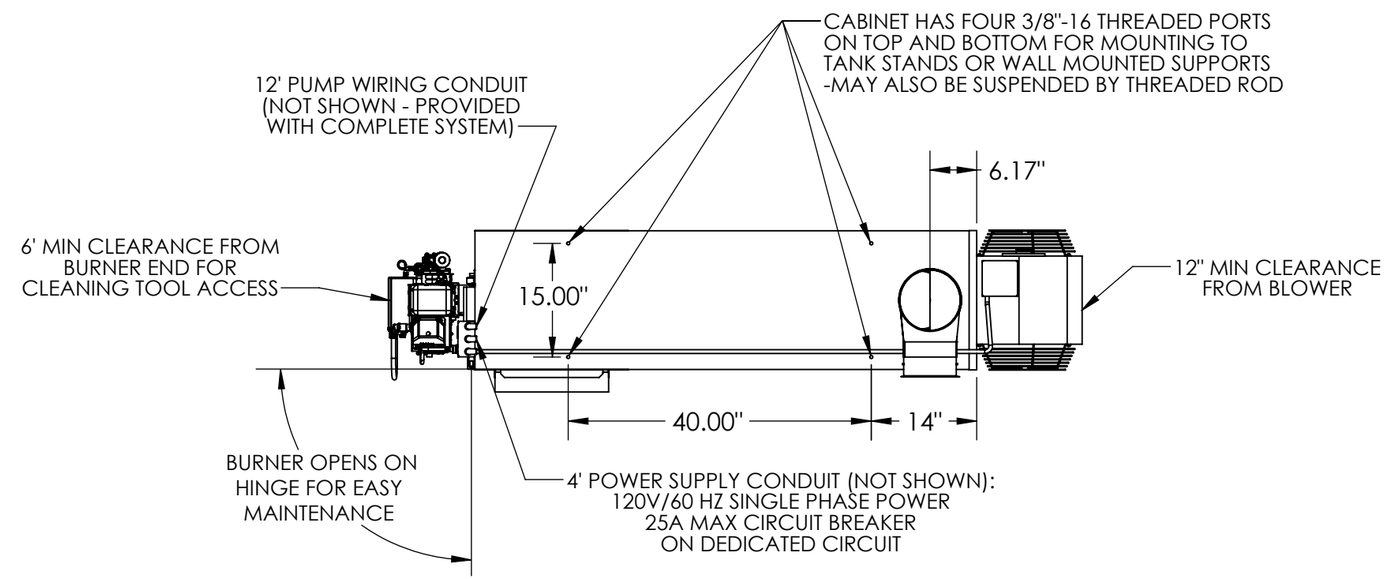

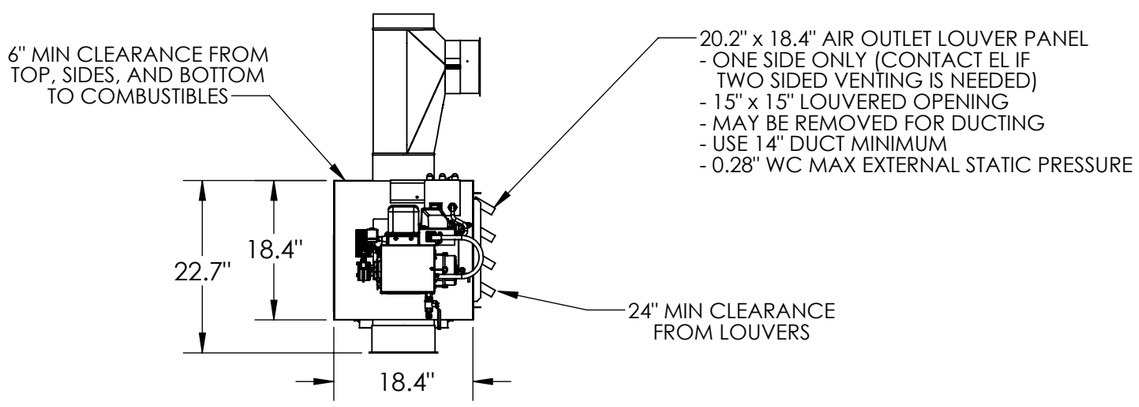

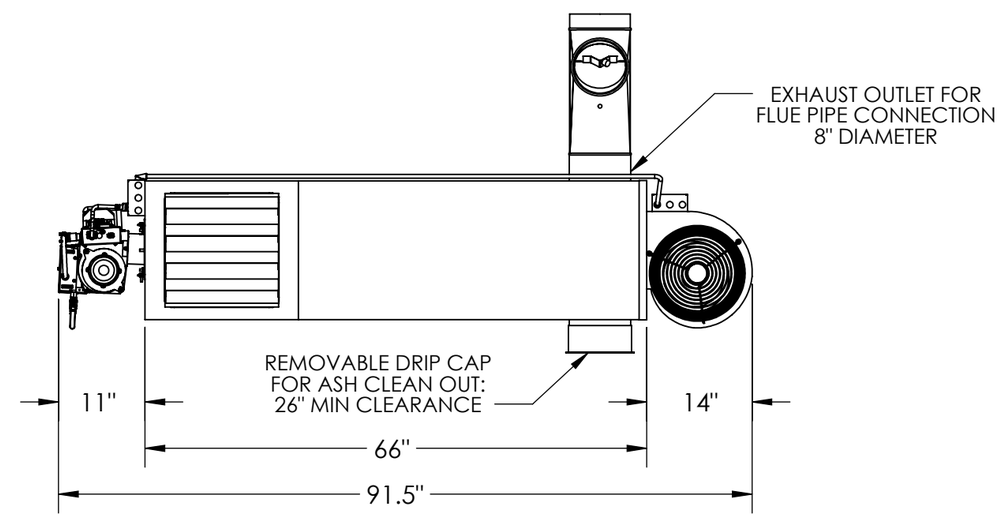

ITEM # 98030025